ALB Materials Inc

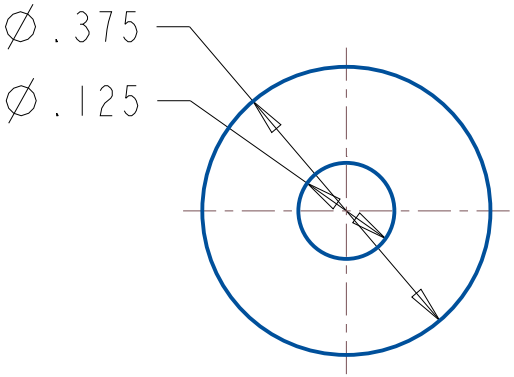

UNLESS OTHERWISE SPECIFIED, DIMENSIONS ARE IN INCHES

TOLERANCES:
FRACTIONAL 0.030
ANGULAR: 0.5
TWO PLACE DECIMAL 0.010
THREE PLACE DECIMAL 0.002

MATERIAL
SEE PRODUCT PAGE

ALB Materials Inc

TITLE:
Ring/Tube Magnet

SIZE	DWG. NO.	REV
A	**R622**	0

SCALE: 4:1 | DO NOT SCALED RAWING | SHEET 1 OF 1

PROPRIETARY AND CONFIDENTIAL: THE INFORMATION CONTAINED IN THIS DRAWING IS THE SOLE PROPERTY OF ALB MATERIALS INC. ANY REPRODUCTION IN PART OR AS A WHOLE WITHOUT THE WRITTEN PERMISSION OF ALB MATERIALS INC. IS PROHIBITED.

5 4 3 2 1

https://www.albmagnets.com/
sales@albmagnets.com